All dimensions are in inches

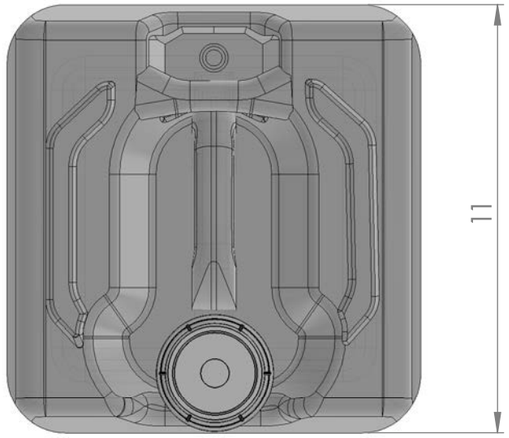

- **Physical Specifica ons:**
  - Container Detail:
    - Container Quan ty: 1ea. 5.5 Gallon Pail
    - Product Weight (Containers and Fluid): 1ea. 50.1 lbs
      - Fluid Volume per Container: 5.5 Gallons
      - Fluid Density at 68F: 8.5957 lbs/gal
      - Weight per Container (Without Fluid): 2.8 lbs
    - Dimensions: 1ea. 11”L x 11”W x 14.98”H
  - Shipping Detail:
    - Shipping Dimensions: 1ea. 12”L x 12”W x 16”H
    - Shipping Weight (Including Packaging and/or Pallet): 1ea. 52 lbs
- **Fluid Content Details:**
  - Total Fluid Volume of Product: 5.5 Gallons
  - Glycol Content: Greater than 95% by volume
  - Guaranteed Assay (Purity) of Propylene Glycol: Greater Than 99.8% (USP Cer fied)
  - Proprietary Corrosion Inhibi on Mixture: Approximately 5% by volume
- **Physical Proper es:**
  - Acceptable Temperature Range: -50F (-46C) to 250F (121C)
  - Boiling Point: 360.2F / 182.3C
  - Freezing Point: -70.3F / -56.8C
  - Specific Gravity @ 60F/15C: 1.06
  - Specific Heat @ 60F: 0.6 BTU/lbF
  - Viscosity @ 60F: 45.9 cP
  - Appearance: Clear/Colorless as standard (can upgrade with dyed blue op on)
- **Boiler Glycol™ DF1** is typically diluted with water in order to form any of the below concentra ons.

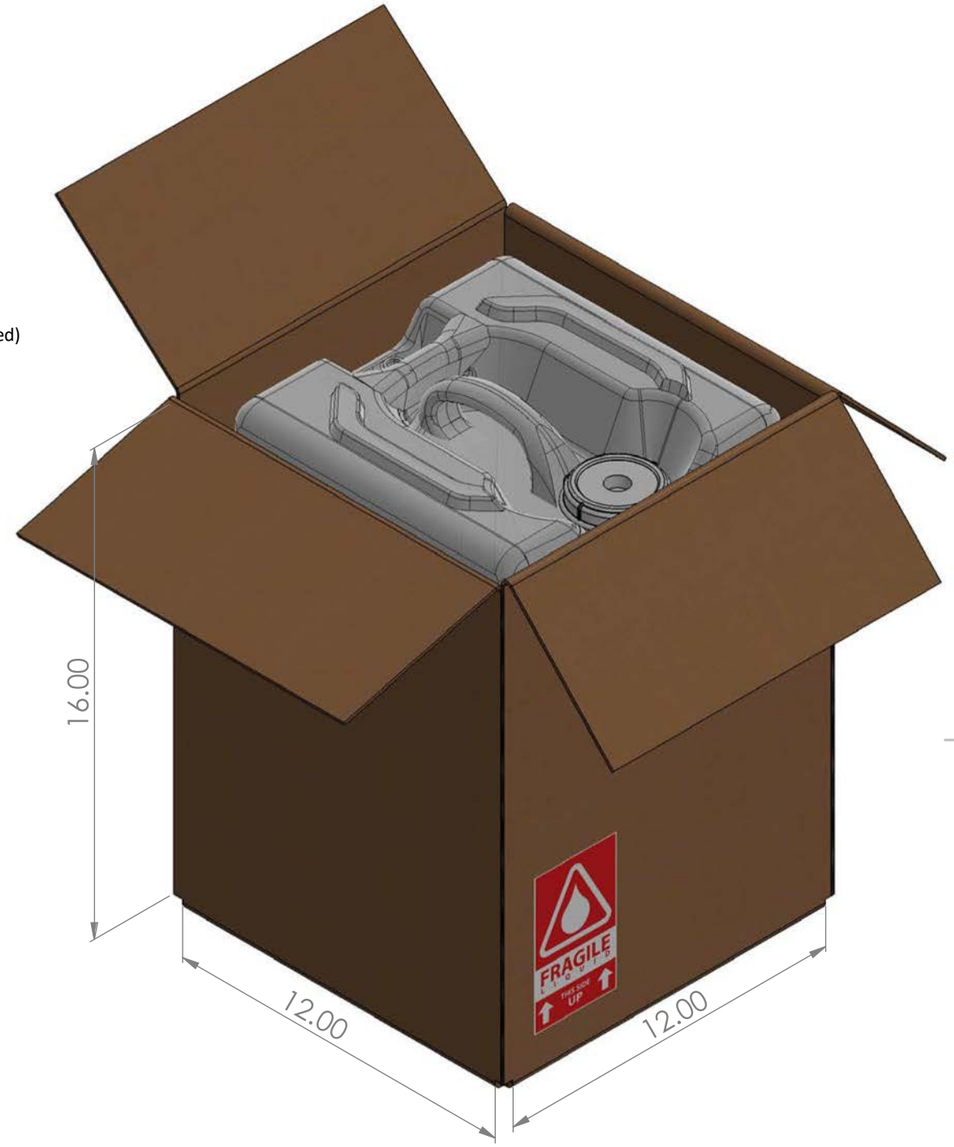

Sales: 8951 Synergy Drive, Suite #224, McKinney, TX 75070
Fulfillment: 526 Charlotte Ave, Bldg #1, Burkburnett, TX 76354
1-855-GLYCOLS sales@glycol.com

UNLESS OTHERWISE SPECIFIED: DIMENSIONS ARE IN MILLIMETERS SURFACE FINISH: TOLERANCES: LINEAR: ANGULAR:		FINISH:		DEBURR AND BREAK SHARP EDGES	DO NOT SCALE DRAWING REVISION
	NAME	SIGNATURE	DATE		
DRAWN					
CHK'D					
APPV'D					
MFG					
Q.A				DWG NO. 5.5 Gallon Pail - BoilerGlycol™ DF1 - 12" x 12" X 16" Box	A3
				WEIGHT:	SCALE:1:10 SHEET 1 OF 1

PROPRIETARY NOTICE: DOCUMENT AND THE SUBJECT MATTER HEREOF ARE THE PROPERTY OF GLYCOL, INC. AND SHALL NOT BE REPRODUCED, COPIED, OR USED FOR THE PURPOSE OF MANUACTURING OR SALE OF APPARATUS EXCEPT BY WRITTEN PERMISSION OF GLYCOL, INC.